LINDSTRÖM

7893K
Short Serrated Snipe Nose Pliers with Synthetic Handle 120 mm

PRODUCT DETAILS

- Supreme series short snipe nose pliers
- ESD safe mono-material handles with return spring
- High performance alloyed steel
- Polished finish
- Numerically controlled machine grinding guarantees accuracy & increases the tools reliability & consistency
- Tough hardened 42-46 HRC
- Screw joint that minimizes friction & maximizes jaw alignment
- 20 mm of serrated jaws with radiused edges

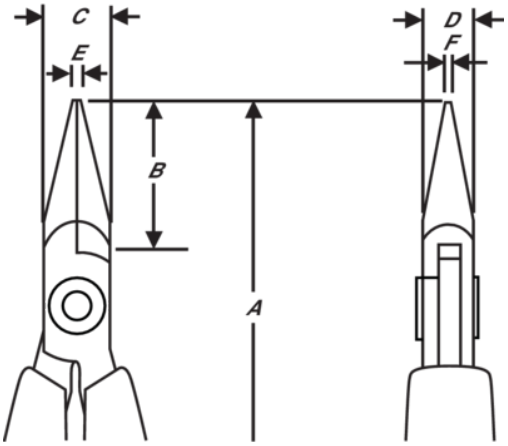

PRODUCT ATTRIBUTES

Product: 7893K

	Snipe Nose, Short		S	A	120 mm
A	4.72 in	B	20 mm	B	0.79 in
C	9 mm	C	0.35 in	D	6 mm
D	0.24 inch	E	1.2 mm	E	0.05 in
F	0.8 mm	F	0.03 in		Serrated
g	56 g	Ω	Dissipative		