LINDSTRÖM

7891
Snipe Nose Pliers with Synthetic Handle & Serrated Jaw 132 mm

PRODUCT DETAILS

- Supreme series snipe nose pliers
- ESD safe mono-material handles with return spring
- High performance alloyed steel
- Polished finish
- Numerically controlled machine grinding guarantees accuracy & increases the tools reliability & consistency
- Tough hardened 42-46 HRC
- Screw joint that minimizes friction & maximizes jaw alignment
- 32 mm jaws with radiused edges
- CO standard handle shape in conductive material

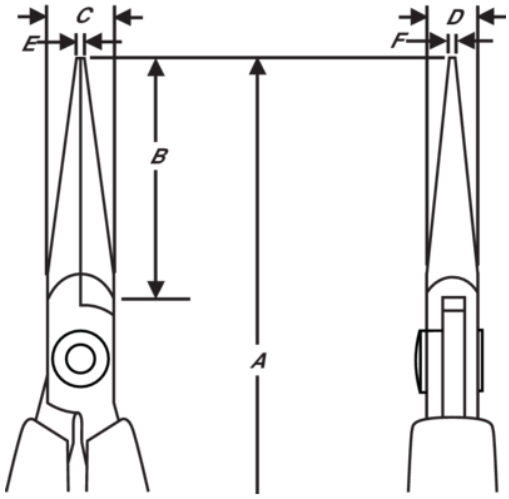

PRODUCT ATTRIBUTES

Product: 7891

	Chain Nose		M	A	132 mm
A	5.20 in	B	32 mm	B	1.26 in
C	9 mm	C	0.35 in	D	6 mm
D	0.24 inch	E	1.2 mm	E	0.05 in
F	0.8 mm	F	0.03 in		Serrated
g	72 g	Ω	Dissipative		